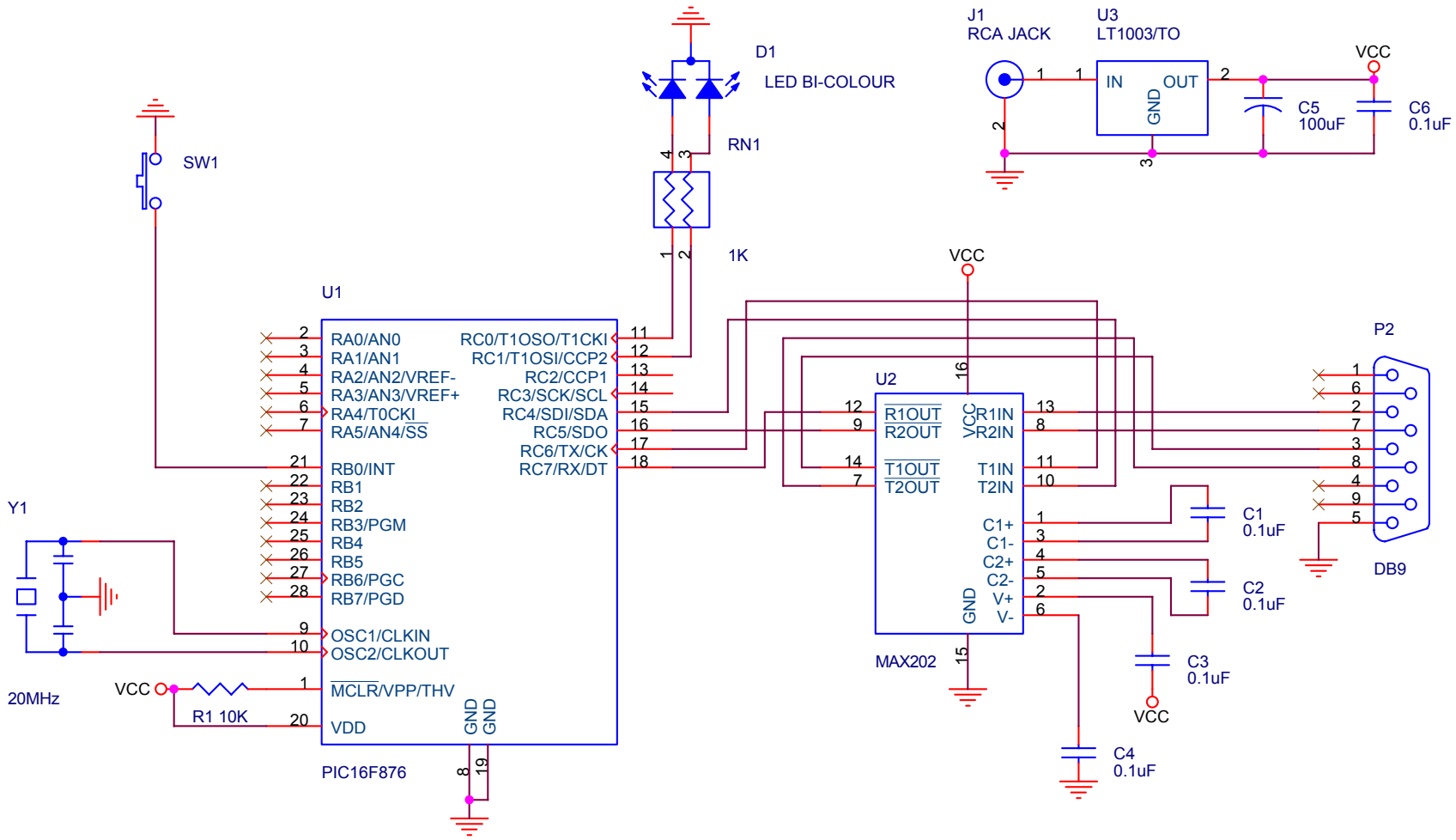

Title	RS-232 Interface with hardware flow control	
Size A	Document Number <Doc>	Rev <RevCode>
Date: Sunday, December 08, 2002	Sheet 1 of 1	