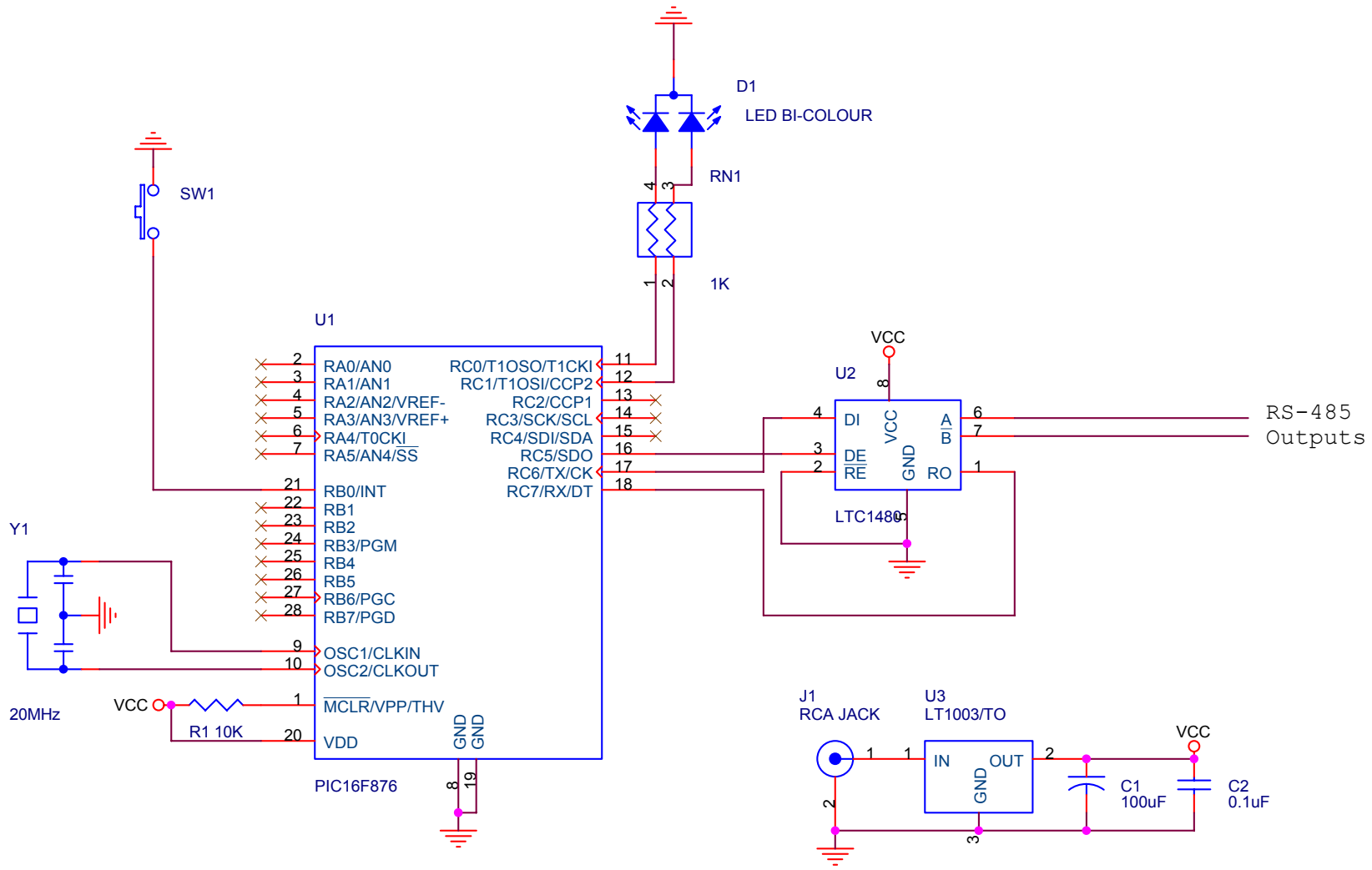

Title	Simple RS-485	
Size A	Document Number <Doc>	Rev <RevCode>
Date: Sunday, December 08, 2002	Sheet 1 of 1	