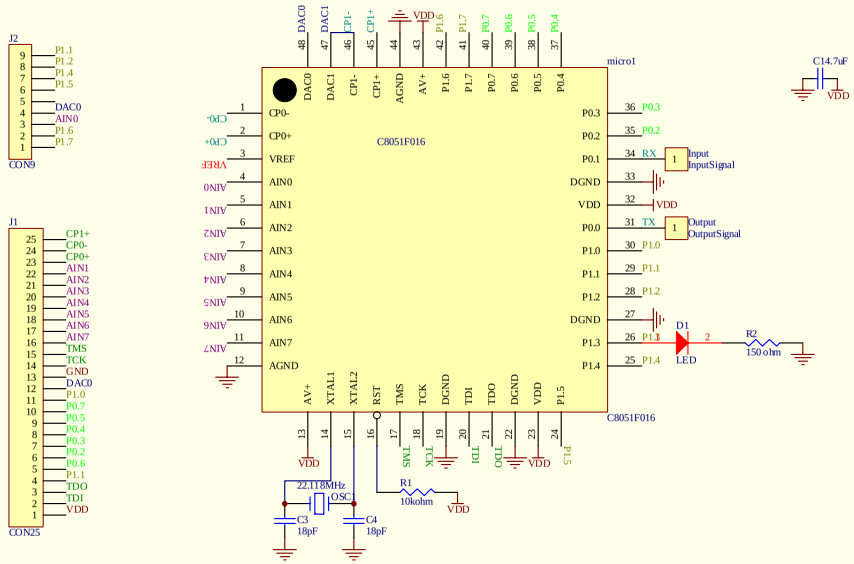

Title		
Size B	Number	Revision
Date: 13-Dec-2001	Sheet of	Drawn By:
File: D:\Projects\PushPin\boards\version3\PushPin.SchDoc		